# TITAN Rotary 24T+TDC

Harness Required: E22 Ver 1.0 & E26 Ver 1.0
Last Changed: 19/04/2011
Drawing Ver: 1.0

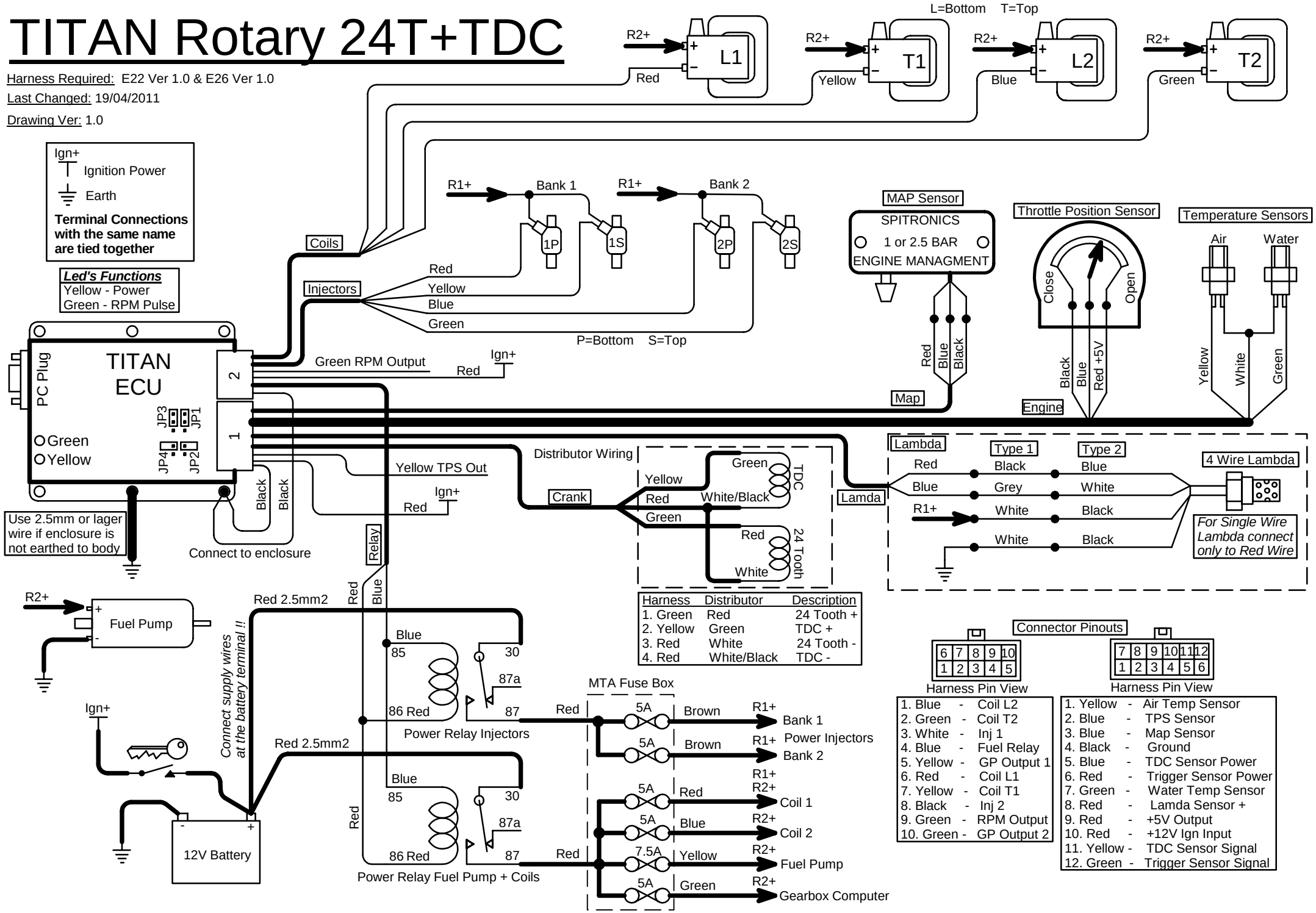


| Harness | Distributor | Description |
|---|---|---|
| 1. Green | Red | 24 Tooth + |
| 2. Yellow | Green | TDC + |
| 3. Red | White | 24 Tooth - |
| 4. Red | White/Black | TDC - |

1. Blue - Coil L2
2. Green - Coil T2
3. White - Inj 1
4. Blue - Fuel Relay
5. Yellow - GP Output 1
6. Red - Coil L1
7. Yellow - Coil T1
8. Black - Inj 2
9. Green - RPM Output
10. Green - GP Output 2

1. Yellow - Air Temp Sensor
2. Blue - TPS Sensor
3. Blue - Map Sensor
4. Black - Ground
5. Blue - TDC Sensor Power
6. Red - Trigger Sensor Power
7. Green - Water Temp Sensor
8. Red - Lamda Sensor +
9. Red - +5V Output
10. Red - +12V Ign Input
11. Yellow - TDC Sensor Signal
12. Green - Trigger Sensor Signal